Hoftrac®

WEIDEMANN

designed for work

Includes eHoftrac®

The multifunctional Hoftracs®.

Powerful helper for every application.

Your personal Hoftrac®.

Compact design, low centre of gravity, tight turning radius, and a powerful performance – these features have characterised the Hoftrac® series for years and still determine the immense success of our machines.

Our basic models offer you the starting basis for the tailored-to-suit outfitting of your machine. With the lower priced entry models, you receive the ability to freely configure your machine: Choose from among the numerous options the ones you need for your application. You can thus be sure that your machine completely meets your individual needs. And the best thing about the Hoftrac® concept: with our series, you only pay for what you really need.

Compact and manoeuvrable Hoftracs®.

Tailored equipment and raw power.

A feel-good working area.
More on pages 12 – 15

Efficient tool change.
More on page 7

Easy serviceability with
the laterally tiltable operator's cabin.
More on page 11

Excellent corrosion protection
through powder-coating
More on page 22

Flexible selectable driving positions.
More on page 8

Road capability with
articulated pendulum joint.
More on page 6.


1140


1160


1160eHoftrac®


1240LP


1260


1280


1350CC


1380


1880

The basic Weidemann virtues.

Agile, multi-functional, and suitable for all terrains.

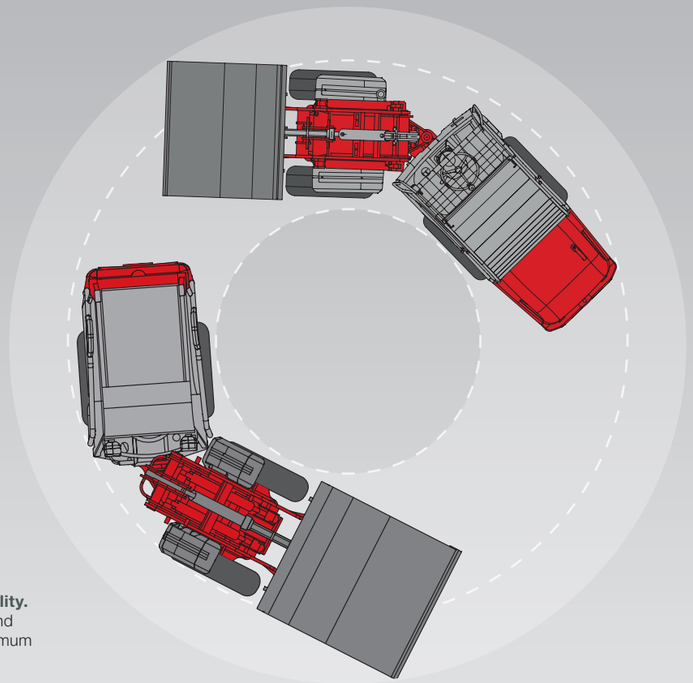

Compact machines with a high level of manoeuvrability.
Especially when things become tight, e.g. work in stables and storage areas, our Hoftracs® feature a small radius and optimum manoeuvrability.

A multi-tool for various applications.
Regardless of whether you are feeding, mucking out, sweeping, stacking, or transporting: thanks to the enormous variety of different attachments, your Weidemann Hoftrac® becomes a universal multi-tool. You can find more about this on pages 24-27.

The backbone of the Weidemann design: the legendary articulated pendulum joint.
Weidemann Hoftracs® always run with all four wheels on the ground – in any situation and in any ground conditions. Because the front and rear carriage can oscillate self-contained of each other, they react sensitively to every unevenness. The benefits: you always drive with maximum traction; no power is wasted.

Variety in the outfitting.
The Weidemann Hoftracs® feature comprehensive and sturdy standard equipment. Depending on application and preferences, the engine, drive, operator's cabin, and hydraulics can be individually configured. Your Weidemann is always custom-made.
A selection of the standard equipment and options available can be found on pages 28–29 and at www.weidemann.de.

Efficiently change attachments.
Thanks to the hydraulic quick-change system, attachments can be readily exchanged. Your Weidemann machine is therefore always ready for use. This increases productivity and profitability.

Choose your operator's cab.

Smart solutions for all operating conditions.

Safe operator's canopy with restraint system.
Maximum safety that is state of the art. As a standard, Weidemann installs an operator's canopy with a restraint system on all Hoftrac® models. The operator's canopy and the restraint system for the operator meet the current European machine directive (2006/42/EC) for ROPS and FOPS protection. Depending on the model, a front and rear window is available to protect the operator from inclement weather.

Comfortable cabin.
The spacious cabin meets the current European machine directive (2006/42/EC) according to ROPS and FOPS protection and offers a great deal of headroom and freedom of movement. Thanks to the complete glazing, the operator has an outstanding overview of the attachment and the entire working area. Look on page 29 to see which models feature a cabin.

1240LP – Low Position.
The lower seating position of the operator allows for a lower overall height of the machine. Additional advantages: a machine centre of gravity near the ground and a comfortable step entry.

Foldable operator's canopy eps (Easy Protection System).
Optionally, all Weidemann Hoftracs® (except the 1240LP and 1880) can be equipped with the folding eps operator's canopy.
This also meets the current European machine directive (2006/42/EC) for roll-over protective structure and FOPS protection. With a few hand movements, the eps can be manually prepared for a low clearance height.

Hydraulically lowerable operator's canopy epsPlus (Easy Protection System Plus).
The optionally available epsPlus is a hydraulically lowerable operator's canopy, which the operator can operate from his seat. It solves the problem of low clearance heights and considerably facilitates work. The epsPlus is a convenient solution with a tremendous time savings and high safety standards – available for the 1160, 1160e eHoftrac®, and 1260.

Awarded with:

Economic efficiency that's worth it.

Efficient work operation thanks to reliable technology.

Work economically.
Economic efficiency is currently one of the most important features that Hoftracs® should bring to your business. The faster and more time-saving a wheel loader can manoeuvre, the higher its performance. For the machines of Weidemann, economy means technically sophisticated solutionssuch as large lift height, strong tensile force, high stability, and an efficient quickhitch system for attachments.

Connectible 100% differential lock.
The connectible 100% differential lock provides maximum traction and pushing power if necessary. It also keeps the tire wear low (switched off during normal operation). This increases the efficiency of your machine!

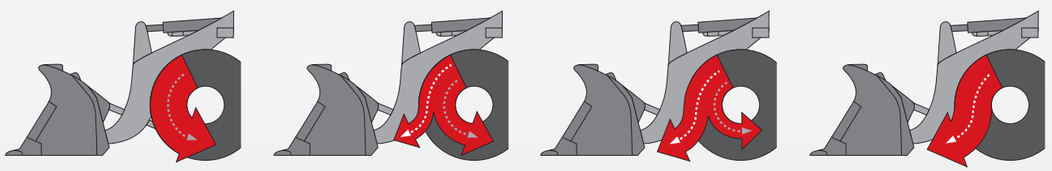

The brake-inch pedal.
In Weidemann machines, the hydrostatic 4-wheel drive is combined with the brake pedal. Through the inching, this enables creeping until standstill. With the brake-inch pedal, it is possible to travel at millimetre precision in crawler gear at full engine speed while quickly lifting. If the pedal is pushed further, the machine will stop. The advantage of the brake-inch pedal is the optimal distribution of the engine output. In addition, it is not possible to stall the machine.

Optimum ease of servicing.
The models of the Hoftrac® series are equipped with a tiltable operator's cabin (exception 1240LP). This allows easy access to the engine, hydraulic system, and electronics. The checking and maintenance of the machine are facilitated significantly. The engine hood can be opened widely, thereby allowing for optimal access.

Tremendous lifting and shearing forces thanks to the large-dimensioned hydraulic cylinders.
Weidemann always includes two strong lift cylinders on all Hoftracs®. This ensures that the load distribution is always optimally transferred to the load arm. In addition, the entire loader unit gains stability. The size of the hydraulic cylinder is always adapted to the size of the respective machine. This is gentle on both machine and material.

High level of operating and driving comfort.

Optimal visibility and good working environment.

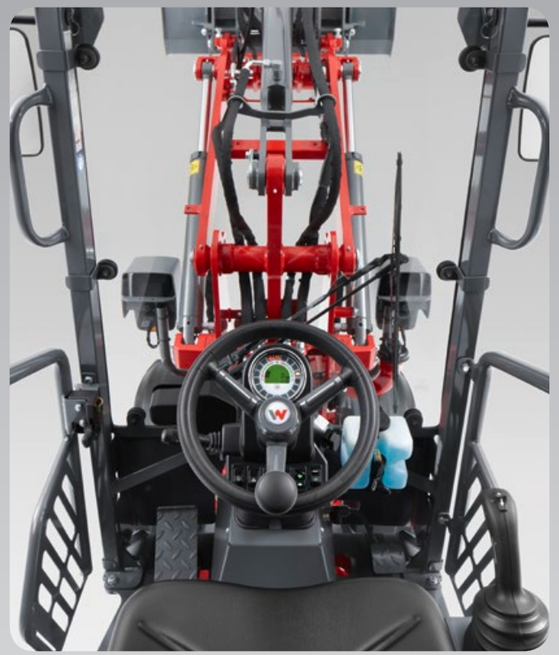

Good all-round visibility.
The operator's canopy/cabin provides an excellent overview of the attachments, the immediate working area, and the entire machine surroundings.

Comfortable operator's seat.
The operator's seat is adjustable, ergonomically formed, and well suspended. The optional air-suspended comfort seat allows for fatigue-free work. The seats are heated for working in cold conditions.

Ventilation as required.
The cabins feature large, wide-opening doors on both sides. Depending on the cabin type, the upper window can be folded up completely and locked. A gap ventilation is also possible.

Comfortable working environment.
An excellent working environment thanks to an efficiently working heating and ventilation system featuring a blower, fresh air filter, and well-placed air nozzles. In warm temperatures, an air-conditioning system is recommended (available for 1880).

A motivating working area.

Ergonomic operator's controls and simple handling.

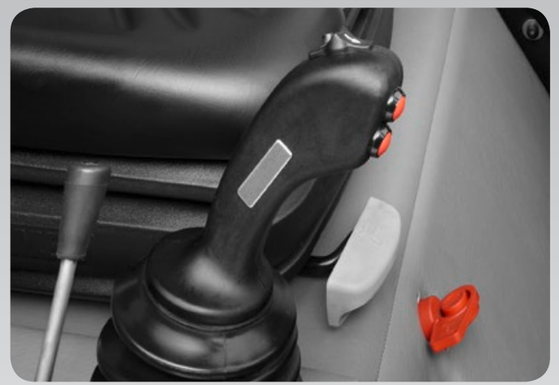

Tested and operator-friendly – the Joystick for the Hoftrac® series.
The whole machine is in your hand with the multifunction lever or joystick. Sturdy and sensitive control for all lifting and lowering motions as well as tilting the tool in and out with just one lever. Depending on the machine type, the joystick can be supplemented with additional functions.

The joystick for the 1880.
The joystick becomes an all-rounder, thereby increasing the machine's ease of use. In addition to the functioning of the 3rd proportional control circuit that can be activated via the joystick, the continuous operation of the 3rd control circuit can be activated via the rocker switch – by moving the thumb wheel (also in both directions).

The optional function of the 4th control circuit can also be operated proportionally via the joystick. Both electrical functions can also be operated on the joystick in a detenting or latching manner. Both electric functions are independent so that they can be individually configured by the operator.

Adjustable steering column.
Thanks to the adjustable steering column, you can adjust the operator's cab to your physical dimensions. By adjusting the various operator's controls, you can achieve a completely ergonomic working area.

The main functions always in sight.
Thanks to the digital display, you have a good overview of your machine. In addition to temperature, tank filling, or operating hours, active functions (e.g. electrical functions, the continuous operation of the 3rd control circuit or the activated differential lock) are displayed in the cockpit (varies depending on the machine type).

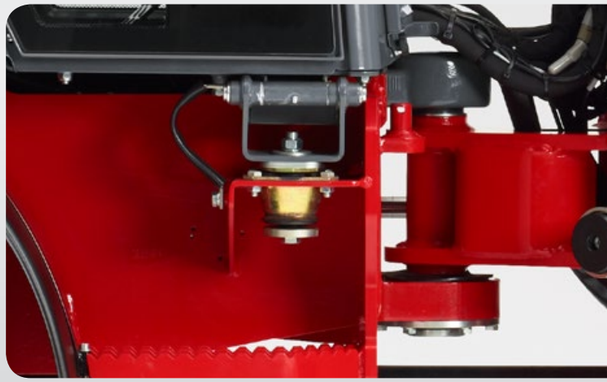

Vibration-damped working area.
Vibrations and impacts are absorbed by the machine.
Your body is protected, and you can work longer in a much more relaxed and focused manner.

The new eHoftrac®

Original Hoftrac. 100% electric.

Original Hoftrac®: the indispensable multi-tool.
A compact and sturdy design, low centre of gravity, small turning radius, powerful performance and a variety of attachments – these features identify our Hoftrac® and still determine its great success. The new 1160 eHoftrac® combines the advantages of the traditional Hoftrac® with the drive type of the future.

100 % electric: technology that excites.
A lead-acid battery drives the eHoftrac® to peak performances – and only requires an electrical connection with 230 V to do so. Two separate electric motors are used in the machine: one for the drive and one for the drive system of the work hydraulics. This minimises the power consumption because the power is only drawn when it is really needed. The electric motor for the drive also allows a dynamic and powerful start-up of the machine. This can be felt in every acceleration process.

The new eHoftrac®.

The innovation for your business.

The machines of the 11 and 12 series are usually deployed for several hours of stable work in early mornings and late evenings. The traditional 1160 series Hoftrac® was used by Weidemann as the first fully electric eHoftrac®. One battery charge suffices for a work operation of 2–5 h, depending on the application conditions. This working duration is quite sufficient for machines in such a performance category under normal conditions. The concept of the eHoftrac® is based on a time-tested large-scale technology from materials handling equipment.

The frequency inverter
converts direct current from the battery into a 3-phase AC, which is required from both electric motors.

The power-break contactor
is the main relay. It switches the electrical connection link between the battery and the consumers.

The control unit
controls the drive system and the work hydraulics.

The battery
provides the necessary energy for both electric motors.

eHoftrac®

The 1160 eHoftrac® has received multiple international awards:

Eima
Innovation award 2014
Italy

Agra
Innovation award 2015
Bulgaria

Equitana
Innovation award 2015
Germany

demo park
Innovation award 2015
Germany

Impressive battery technology.

Efficient work with AGM technology.

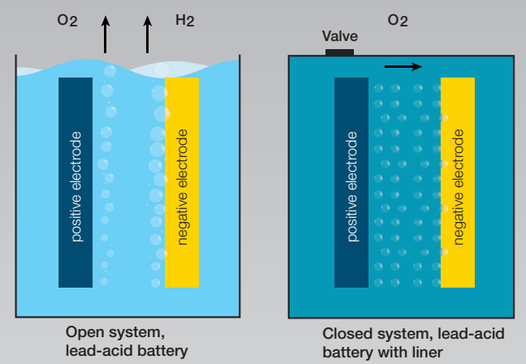

The advantages of the new AGM battery in the 1160 eHoftrac®:

- Improved efficiency and better power output with the same capacity
- Leak-proof system thanks to closed battery cells
- Refilling of distilled water is no longer necessary
- On-board battery charger, charging on a normal plug receptacle with 230 V
- Intermediate charging increases the efficiency of the battery
- More safety during charging (up to 75 % less gas formation)
- Increased recuperation capacity (energy recovery)
- Low temperature sensitivity (outside temperature)
- Negligible heat generation during operation

AGM = Absorbent Glass Mat.
AGM technology describes the design of a sealed, maintenance-free lead battery with internal gas recombination. In order to ensure the internal recombination of oxygen gas and hydrogen ions into water, it is necessary to direct oxygen gas generated during charging directly to the negative electrode. In closed battery cells, this movement is almost completely prevented by the liquid electrolyte because of the differences in density. In closed batteries, the quick transport of gas is achieved through non-woven mats (AGM or absorbent glass mat). Smaller pores are thereby wetted by the electrolyte and the larger pores are available for gas transport. For the 1160 eHoftrac® two different batteries are available – one with 48 V and 240 Ah as well as a more powerful one with 48 V and 310 Ah.

Environmental friendliness that pays off in the long run.
A comparison of the operating costs over the average service life of the machine indicates that the costs for the diesel drive are significantly higher than those of the eHoftrac®. Included here were the energy and service costs as well as the battery replacement for the eHoftrac® about every 2,500 operating hours.

It can be said that the increased investment costs for the eHoftrac® are about 20% when compared with a machine of equal power. This will pay for itself after about 2,800 operating hours. Emission values are reduced by around 43% by the eHoftrac®, thereby documenting its environmental friendliness. If you add the energy generation and energy consumption from your own PV unit to this, this would result in considerably more positive effects.

Contact your Weidemann dealer to find out about the costs for you and your business.

Operating costs over the service life of the machine

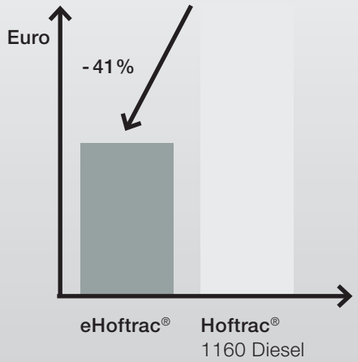

CO_2-emission over lifetime of the machine

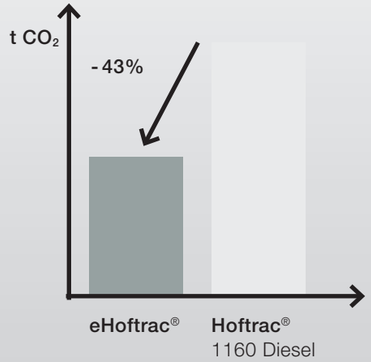

Our quality promise.

Weidemann offers true German-made quality.

At Weidemann, quality is not an empty promise. A true Weidemann comes from one of the most modern wheel and telehandler production facilities in Europe. The plant in Korbach guarantees a consistently high quality of our products. At Weidemann, quality begins early on because compliance with defined processes is taken seriously. Purchased parts supplied to production are continually monitored, tested, and optimised in co-operation with suppliers.

Powder-coating.
The powder-coating is another key feature of the special quality standard at Weidemann. This guarantees optimum protection against corrosion. In comparison to conventional wet painting, it greatly extends the service life of the machine. It is also more efficient and environmentally friendly.

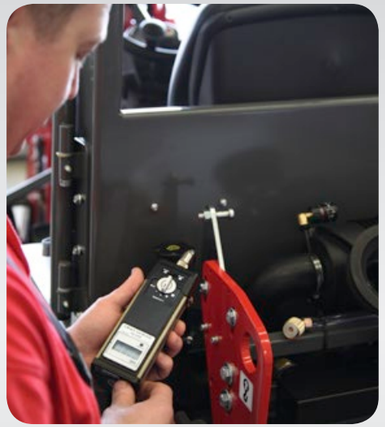

Careful final inspection.
Every Weidemann that leaves our plant is subjected to a careful final inspection. This guarantees our customers a long service life and low operating costs from the onset. The Weidemann label means quality.

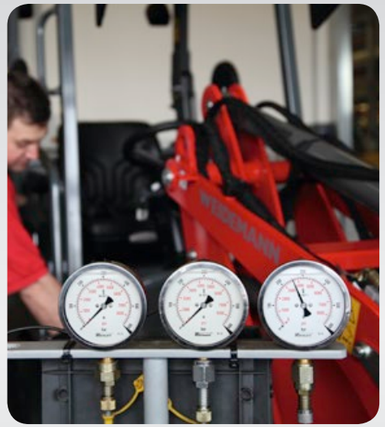

DIN EN ISO 9001.
This standard is recognised internationally. With a certified system in accordance with international standard ISO 9001, Weidemann ensures that a focus on quality is reflected in all thoughts and actions within the company and that customers receive machines of certified quality.

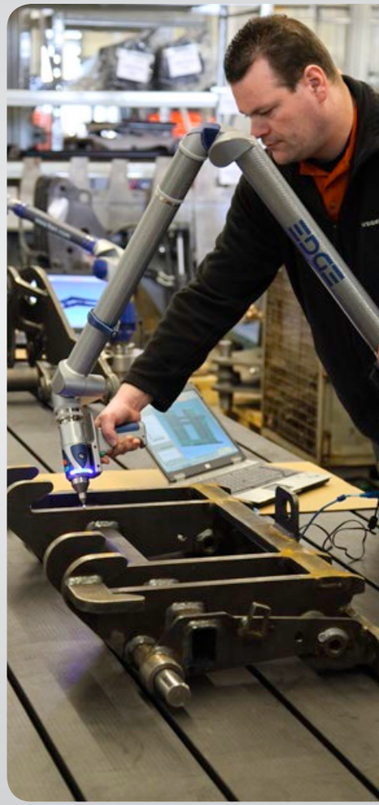

Weidemann Hoftracs®.

Unbeatable in daily application.


WEIDEMANN

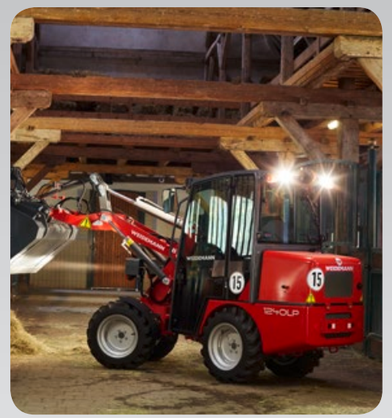


WEIDEMANN
20
1280

No two Hoftracs® are the same.

Just put your machines together...

It's not a multitude of models that decides which problem solutions are optimal but rather the individual machine equipment for each area of use.

Our basic model, the Hoftrac® series, offers you an economical entry model. In addition, there is an LP-Hoftrac with a particularly low overall height.

Simply choose from our options tailored to suit your needs and assemble your Hoftrac® machine according to your tasks and operational requirements.

And the best thing about the Hoftrac® concept: you only pay for the configuration of your individual machine (i.e. only what you really need).

On the following pages, you will find the standard equipment and options as well as technical data and dimensions for our Hoftrac® series.

1140

1240LP

1160

1260

1160eHoftrac®

1280

1380

1880

Standard equipment and options.

	1140	1160	1240LP	1260	1280	1380	1880
DRIVE SYSTEM							
Hydraulically activated drive system via oil engine	●	–	–	–	–	–	–
Hydrostatic drive via oil engine	○	●	●	●	–	–	–
Hydrostatic drive via transfer gearbox and universal joint shaft	–	○	–	○	●	●	●
Axle K75	●	–	–	–	–	–	–
Axle K80	–	●	●	●	–	–	–
Axle K90	○	–	○	○	–	–	–
Axle T80	–	○	–	○	–	–	–
Axle T94	–	○	–	○	●	●	–
Axle T110	–	–	–	–	–	○	–
Planetary axle PA940	–	–	–	–	–	○	●
100% differential lock, electric-hydraulically connectable on front and rear axle	–	○	–	○	○	○	○
HYDRAULICS							
3rd control circuit (front), DN10	●	●	●	●	●	–	–
3rd control circuit (front), DN12	○	○	○	○	○	●	–
3rd control circuit (front), electric, proportional	–	–	–	–	–	–	●
3rd control circuit	○	○	○	○	○	○	–
4th control circuit	○	○	○	○	○	○	–
4th control circuit (additional)	○	○	○	○	○	○	○
High flow (70 l)	–	○	–	–	–	–	–
High flow (100 l)	–	–	–	–	–	–	○
Work hydraulics of large pump (depending on model, between 58.5 l and 70 l)	–	–	–	–	–	○	○
Rear hydraulic connection also single-acting	○	○	–	○	○	○	–
Additional hydraulic connection in rear (double-acting)	–	○	–	○	○	○	○
Three-point receptacle in the rear	–	–	–	○	○	○	–
OPERATOR'S CAB							
Operator's canopy with retaining system ROPS and FOPS tested	●	●	●	●	●	●	●
Easy Protection System (eps) ROPS and FOPS tested	○	○	–	○	○	○	–
Easy Protection System Plus (epsPlus) ROPS and FOPS tested	–	○	–	○	–	–	–
Cab with heater, ventilation, and window wiper; ROPS and FOPS tested	–	○	○	–	○	○	○
Laterally tiltable operator's cab	●	●	–	●	●	●	●
Comfort seat with safety belt mechanically suspended	●	●	●	●	●	●	●
Comfort seat with safety belt air-suspended	–	○	○	○	○	○	○
Seat heater	○	○	○	○	○	○	○
Lighting equipment according to German Road Traffic Regulations	○	○	○	○	○	○	○
Air-conditioning system	–	–	–	–	–	–	○
OTHER							
Weight of cast iron rear including self-recovery feature	–	○	–	○	○	–	–
Counterweight	○	○	○	○	○	○	–
Mechanical quickhitch system for attachments	●	●	–	●	●	●	–
Hydraulic quickhitch system for attachments	○	○	●	○	○	○	●
High lift height	–	○	○	○	○	○	–
TÜV [Industrial Supervisory Board] certificate for road travel	○	○	○	○	○	○	○

● Series
○ Option
– not possible

The illustration shows a selection of standard equipment and options. More detailed information about standard equipment and options can be obtained from your Weidemann distributor. More information can be found at www.weidemann.de

Technical data.

	1140 1140 basic line	1160	1240LP	1260	1280	1350CC	1380	1880
ENGINE DATA								
Engine manufacturer	Perkins	Perkins	Perkins	Perkins	Perkins	Perkins	Perkins	Perkins
Type of engine	403 D-11	403 D-11	403 D-15	404 D-15	404 D-15	404 D-22 de	404 D-22 de	404 D-22
Cylinders	3	3	3	4	4	4	4	4
Max. engine output kW	17.9	17.9	24.4	24.6	24.6	31.4	31.4	36.3
Max. engine output HP	24	24	33	33	33	43	43	50
At max. speed rpm	2,800	2,800	2,800	2,800	2,800	2,600	2,600	2,800
Displacement cm^3	1,131	1,131	1,496	1,508	1,508	2,216	2,216	2,216
Type of coolant	Water	Water	Water	Water	Water	Water	Water	Water
Emissions standard level	IIIA	IIIA	IIIA	IIIA	IIIA	IIIA	IIIA	IIIA
ENGINE DATA OPTIONAL								
Engine manufacturer	-	Perkins	-	-	-	-	Perkins	Perkins
Type of engine	-	403 D-15	-	-	-	-	404 D-22	404 F-22T
Cylinders	-	3	-	-	-	-	4	4
Max. engine output kW	-	23.4	-	-	-	-	35.7	44.7
Max. engine output HP	-	32	-	-	-	-	49	60
At max. speed rpm	-	2,600	-	-	-	-	2,600	2,800
Displacement cm^3	-	1,496	-	-	-	-	2,216	2,216
Type of coolant	-	Water	-	-	-	-	Water	Water
Emissions standard level	-	IIIA	-	-	-	-	IIIA	IIIB
ELECTRICAL SYSTEM								
Operating voltage V	12	12	12	12	12	12	12	12
Battery Ah	77	77	77	77	77	77	77	95
Alternator A	40	40 (65)	65	65	65	65	65	85
WEIGHTS								
Operating weight (standard) kg	1,630	1,910-2,250*	1,840	2,080-2,290*	2,380-2,550*	2,550	2,740-2,950*	3,400
Tipping load with bucket – machine straight (in accordance with ISO 14397) kg	733-898*	1,074-1,437*	1,169-1,257*	1,071-1,432*	1,385-1,781*	1,689	1,876–2,071* / 1,803–1,948*	2,032-2,269*
Tipping load with bucket – machine pivoted (in accordance with ISO 14397) kg	554-683*	815-1,206*	999-1,065*	839-1,143*	1,154-1,478*	1,361	1,495–1,653* / 1,508–1,657*	1,692-1,898*
Tipping load with pallet fork – machine straight (in accordance with ISO 14397) kg	538-669*	829-970*	899-969*	838-1,122*	1,081-1,401*	1,342	1,557–1,722* / 1,534–1,614*	1,731-1,908*
Tipping load with pallet fork – machine pivoted (in accordance with ISO 14397) kg	398-501*	631-866*	767-822*	654-896*	981-1,152*	1,074	1,239–1,368* / 1,270–1,359*	1,459-1,605*
VEHICLE DATA								
Operator's cabin (optional)	FSD (eps)	FSD (eps, eps Plus, cabin)	FSD (cabin)	FSD (eps)	FSD (eps, cabin)	FSD (eps)	FSD (eps, cabin)	FSD (cabin)
Axle (optional)	K75 (K90)	K80 (T80, T94)	K80	K80 (K90, T80, T94)	T94	T94	T94 (T110, PA940)	PA940
Travel speed (optional) km/h	0-12 (13)	0–13 (20, 30)	0-13	0–13 (20, 30)	0-20 (30)	0-20 (30)	0-20 (30)	0-20 (28)
Fuel tank capacity l	21	20	21	40	43	50	53	65
Hydraulic oil tank capacity l	18	20	12	27	25.5	30	30	35
HYDRAULIC SYSTEM								
Driving hydraulics – working pressure (optional) bar	215 (305)	305 (450)	305	305 (330)	330 (450)	360	360 (450)	450
Work hydraulics – discharge volume (optional) l/min	30.8	30.8 (36.4-70)	44.8	44.8	44.8	49.4	49.4 (58.5)	56 (63-100)
work hydraulics – working pressure bar	205	225	185	185	185	210	210	210
DRIVE SYSTEM								
Drive type (optional)	Hydraulically activated (hydrostatic)	Hydrostatic	Hydrostatic	hydrostatic	Hydrostatic	Hydrostatic	Hydrostatic	Hydrostatic
Drive system (optional)	Oil engine	Oil engine (universal joint shaft)	Oil engine	Oil engine (universal joint shaft)	Universal joint shaft	Universal joint shaft	Universal joint shaft	Universal joint shaft
NOISE CHARACTERISTIC VALUES								
Average sound power level LwA dB (A)	99.7	98.4	100.1	100.1	99.7	99.9	99.8	99.8
Guaranteed sound power level LwA dB (A)	101	101	101	101	101	101	101	101
Specified sound pressure level LpA dB (A)	85	85	84	85	82	82	82	82

* With optional equipment (e.g. cabin, axle, tires, counterweight, cast-iron rear weight)
FSD = operator's canopy
eps = Easy Protection System (fold-down operator's canopy)
epsPlus = Easy Protection System Plus (hydraulic lowerable operator's canopy)

More information can be found at www.weidemann.de

Technical data 1160 eHoftrac®

	1160 eHoftrac®
ELECTRIC MOTOR	
Hydraulic motor, capacity S2 (60 min) kW	6.5
Lifting motor, capacity S3 (15%) kW	9
BATTERY STANDARD	
Battery voltage V	48
Nominal capacity K5 Ah	240
Battery weight (±5%) kg	450
Charging time h	8
Running time during intense continuous use with heavy materials handling, uninterrupted operation h	1.5*
Running time during normal agriculture activities, uninterrupted operation h	2–3.5*
Running time during normal agriculture activities with Interruptions (30 min driving, 30 min standstill) h	to 4*
BATTERY OPTIONAL	
Battery voltage V	48
Nominal capacity K5 Ah	310
Battery weight (±5%) kg	579
Charging time h	6
Running time during intense continuous use with heavy materials handling, uninterrupted operation h	2.1*
Running time during normal agriculture activities, uninterrupted operation h	2.8–4.5*
Running time during normal agriculture activities with Interruptions (30 min driving, 30 min standstill) h	to 5*
ELECTRICAL SYSTEM	
Operating voltage V	12
WEIGHTS	
Operating weight (standard) kg	2,400
Tipping load with bucket – machine straight (according to ISO 14397) kg	1,509–1,576
Tipping load with bucket – machine pivoted (according to ISO 14397) kg	1,251-1,307
Tipping load with pallet fork – machine straight (according to ISO 14397) kg	1,112-1,163
Tipping load with pallet fork – machine pivoted (according to ISO 14397) kg	916-959
VEHICLE DATA	
Axle	T80
Operator's cabin (optional)	FSD (eps, epsPlus)
Travel speed km/h	0–15
Hydraulic oil tank capacity l	18.5
HYDRAULIC SYSTEM	
Work hydraulics	
Discharge volume (optional) l/min	32
Working pressure bar	225
DRIVE SYSTEM	
Drive type/drive system	electrically via universal joint shaft
NOISE CHARACTERISTIC VALUES	
Average sound power level dB (A)	91.8
Guaranteed sound power level LwA dB (A)	92
Specified sound pressure level LwA dB (A)	76

*The running times of the battery are strongly dependent on the respective application conditions, the work task and the manner of driving. This can also mean that a longer running time can also be achieved. The specified running times can also be fallen short of in extreme cases. Uninterrupted operation (e.g. 30 min driving, 30 min standstill) extends the total running time of the battery.

Standard equipment and options.

	1160 eHoftrac®
DRIVE SYSTEM	
Electrical drive system via universal joint shaft	●
Active standstill control (machine is held by motor)	●
Hill-hold function (machine is held on mountain by motor)	●
Weidemann axle T80	●
BATTERY	
Battery 48 V 240 Ah	○
Battery 48 V 310 Ah	○
On-board battery charger 230 V / 40 A	●
Battery charge indicator	●
STANDARD TYRES (SEE PAGE 36)	
Tyres 10.0/75 - 15 AS ET10	●
HYDRAULICS	
3rd control circuit (front), DN10	●
De-pressurised front return flow	○
3rd control circuit	○
4th control circuit	○
Hydraulic connection in rear double-acting	○
Faster rapid action couplings attachment or machine-side	○
OPERATOR'S CAB	
Operator's canopy with restraint system	●
eps (Easy Protection System)	○
epsPlus (Easy Protection System Plus)	○
Plug receptacle in front, triple-pole, dual function	○
Adjustable steering column	○
LED work lights, 2 in front, 1 in rear	○
Comfort seat with safety belt, mechanically suspended	●
Operating hour meter	●
Lighting equipment according to German Road Traffic Regulations	○
OTHER	
Mudguard front	●
Mudguard rear	●
Mechanical quickhitch system for attachments	●
Hydraulic quickhitch system for attachments	○
High lift height	○
Self-recovery coupling	○
TÜV [Industrial Supervisory Board] certificate for road travel	○

● Series
○ Option
– Not possible

Dimensions.

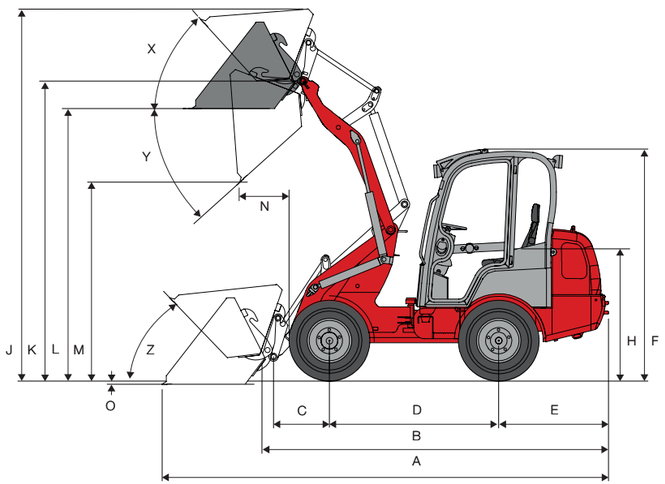

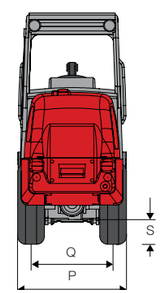

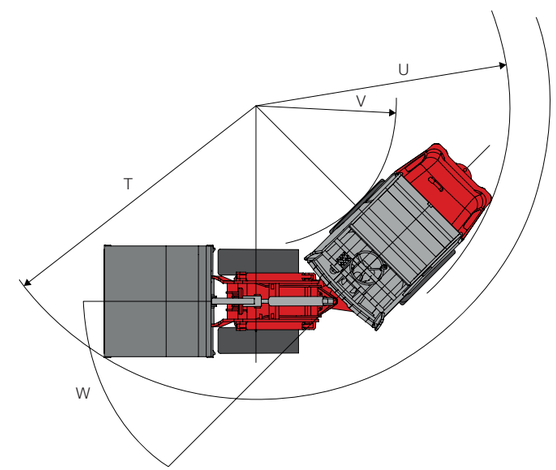

		1140 1140 basic line	1160	1160 eHoftrac®	1240LP	1260	1280	1350CC 1380 P kinematics	1380 P-Z kinematics	1880
	DIMENSIONS									
	Tires	7.00 - 12 AS ET40	10.0/75 - 15.3 AS ET10	10.0/75 - 15.3 AS ET10	27 x 8.50 - 15 EM ET30	27 x 8.50 - 15 EM ET30	10.0/75 - 15.3 AS ET80	10.0/75 - 15.3 AS ET80	10.0/75 - 15.3 AS ET80	10.0/75 - 15AS ET-5
A	**Total length** mm	3,706	3,983	3,983	4,142	4,127	4,248	4,420	4,581	4,715
B	**Total length (without bucket)** mm	2,733	3,005	3,005	3,164	3,151	3,270	3,520	3,700	4,022
C	**Bucket pivot point (to centre of axle)** mm	496	508	508	620	531	531	560	720	675
D	**Wheel base** mm	1,345	1,468	1,468	1,544	1,503	1,623	1,732	1,732	1,952
E	**Rear overhang** mm	779	917	917	889	1,000	1,000	1,182	1,182	1,290
F	**Height with fixed operator's canopy** mm	2,124	2,237	2,257	1,866	2,156	2,184	2,260	2,260	2,336
	Height with fold-down operator's (eps) mm	2,227	2,341	2,361	–	2,260	2,298	2,370	2,370	–
	Height with fold-down operator's canopy, folded mm	1,937	1,928	1,948	–	1,846	1,790	1,850	1,850	–
	Height with lowerable operator's canopy (epsPlus) mm	–	2,241	2,261	–	2,160	–	–	–	–
	Height with lowerable operator's canopy (epsPlus), lowered mm	–	1,942	1,962	–	1,861	–	–	–	–
	Height withcabin mm	–	2,302	–	1,942	–	2,208	2,280	2,280	2,346
H	**Seat height** mm	1,142	1,273 (980*)	1,293	912 (976*)	1,190	1,259	1,280	1,280	1,349
J	**Total working height** mm	3,415	3,423	3,443	3,046	3,473	3,545	3,659	3,830	3,675
K	**Max. height of bucket pivot point** mm	2,734	2,740	2,760	2,361	2,788	2,860	3,010	3,203	3,203
L	**Load-over height** mm	2,405	2,421	2,441	2,042	2,469	2,541	2,690	2,880	2,861
M	**Dumping height** mm	1,807	1,799	1,819	1,379	1,812	1,884	2,130	2,380	2,454
N	**Coverage for M** mm	550	498	498	467	499	447	250	410	198
O	**Digging depth** mm	113	97	77	126	153	81	83	130	104
P	**Total width** mm	850	1,044	1,044	997	970	1,044	1,040	1,040	1,214
Q	**Track width** mm	660	780	780	739	752	780	780	780	950
S	**Ground clearance** mm	190	255	255	201	199	250	250	250	270
T	**Max. outer radius** mm	2,140	2,592 (2,831*)	2,592	3,034 (3,217)	2,648	2,918	2,870 (3,040*)	2,950 (3,120*)	3,447
U	**Radius on outer edge** mm	1,570	2,138 (2,415*)	2,138	2,607 (2,843*)	2,203	2,541	2,612 (2,792*)	2,612 (2,792*)	3,171
V	**Inner radius** mm	600	1,017 (1,311*)	1,017	1,561 (1,775*)	1,083	1,423	1,410 (1,610*)	1,410 (1,610*)	1,831
W	**Articulation angle** °	55°	50° (43°*)	50°	41° (40°*)	50°	45°	48° (44°*)	48° (44°*)	45°
X	**Roll-back angle at max. lift height**°	50°	48°	50°	48°	47°	47°	43°	57°	52°
Y	**Max. dumping angle** °	39°	40°	40°	44°	43°	43°	42°	57°	41°
Z	**Roll-back angle on the ground** °	48°	49°	49°	52°	47°	47°	51°	50°	42°

*With cabin

Tyres.

AXLE	1140 basic line 1140		1160		1160 eHoftrac®	1240LP		1260			1280	1350CC 1380	1380	1880
	K75	K90	K80/T80	T94	T80	K80	K90	K80/T80	K90	T94	T94	T94	PA940	PA940
	Width of machine mm													
TYRES														
7.00-12 AS ET40	850	1,000	920	–	920	900	1,000	920	1,020	–	–	–	–	–
7.00-12 AS ET65	800	950	–	–	–	–	–	–	–	–	–	–	–	–
10.0/75-15.3 RP ET-5	–	–	–	–	–	–	–	–	–	1,210	1,210	–	–	–
10.0/75-15.3 RP ET40	–	–	–	1,120	–	–	–	–	–	1,120	1,120	1,120	1,120	–
10.0/75-15.3 AS ET-5	–	–	–	–	–	–	–	–	–	1,210	1,210	1,210	1,210	1,210
10.0/75-15.3 AS ET10	–	–	1,044	–	1,044	–	–	1,040	1,140	–	–	–	–	–
10.0/75-15.3 AS ET40	–	–	–	–	–	–	–	–	–	1,120	1,120	1,120	1,120	–
10.0/75-15.3 AS ET60	–	–	–	–	–	–	–	1,200	1,044	–	–	–	–	–
10.0/75-15.3 AS ET80	–	–	–	1,044	–	–	–	–	–	1,045	1,045	1,045	1,044	–
11.5/80-15.3 AS ET-5	–	–	–	–	–	–	–	–	–	–	–	–	–	1,240
11.5/80-15.3 AS ET40	–	–	–	–	–	–	–	–	–	–	–	–	1,160	–
12.0/75-18 MPT ET-30	–	–	–	–	–	–	–	–	–	–	–	–	–	1,300
15.0/55-17 AS ET0	–	–	–	–	–	–	–	–	–	–	–	–	1,320	–
15.0/55-17 AS ET-40	–	–	–	–	–	–	–	–	–	–	–	–	1,400	1,400
26.0x12.00-12 AS ET0	1,070	1,250	1,110	–	1,110	1,120	1,220	1,110	1,210	–	–	–	–	–
26.0x12.00-12 RP ET0	1,070	1,220	1,110	–	1,110	–	–	1,110	1,210	–	–	–	–	–
27x 8.50-15 EM ET30	920	1,070	960	–	960	970	1,070	960	1,060	–	–	–	–	–
27x8.50-15 EM ET80	–	–	–	1,000	–	–	–	–	–	1,000	1,000	–	–	–
27x10.0-15.3 AS504 ET0	–	–	1,050	–	1,050	1,050	1,150	1,050	1,150	–	–	–	–	–
27x10.50-15 EM ET-5	1,000	1,150	1,080	–	1,080	1,050	1,150	1,080	1,180	–	–	–	–	–
27x10.50-15 EM ET18	–	–	–	–	–	–	–	–	–	1,160	1,160	–	–	–
27x10.50-15 EM ET60	–	–	–	1,080	–	–	–	–	–	1,080	1,080	–	–	–
31x13.50-15 RP ET0	–	–	–	–	–	–	–	–	–	–	–	1,260	1,260	–
31x15.50-15 AS ET0	–	–	–	1,310	–	–	–	–	1,300	1,320	1,340	1,320	1,320	–
31x15.50-15 AS ET-37	–	–	–	–	–	–	–	–	–	1,410	1,410	1,400	1,400	1,400
31x15.50-15 AS ET-50	–	–	1,280	–	1,280	–	–	1,280	1,400	–	–	–	–	–
31x15.50-15 AS ET-85	–	–	–	–	–	–	–	–	–	–	–	–	–	1,490
31x15.50-15 RP ET0	–	–	–	1,340	–	–	–	–	–	1,340	1,340	1,345	1,345	–
31x15.50-15 EM ET0	–	–	–	–	–	–	–	–	–	1,340	1,340	1,320	1,320	–
31x15.50-15 EM ET-37	–	–	–	–	–	–	–	–	–	1,410	1,410	–	1,400	1,400
33x15.50-15 RP ET-40	–	–	–	–	–	–	–	–	–	–	–	–	1,430	1,430
400/50-15 AS ET0 Starco	–	–	–	1,320	–	–	–	–	–	–	–	–	–	–
400/50-15 AS ET-50 Starco	–	–	1,280	–	–	–	–	1,280	1,380	–	–	–	–	–
400/50-15 AS ET0 Starco Dumper II	–	–	–	–	–	–	–	–	–	1,320	1,320	1,320	–	–
400/50-15 AS ET-37 Starco Dumper II	–	–	–	–	–	–	–	–	–	1,400	1,400	1,400	1,400	1,400
425/55 R 17 AS ET- 40 Alliance 570	–	–	–	–	–	–	–	–	–	–	–	–	1,450	1,450
10-16.5 EM ET0	–	–	–	–	–	–	–	–	–	1,200	1,200	–	–	1,200
10-16.5 EM ET40	–	–	–	1,120	–	–	–	–	–	1,120	1,120	1,120	1,120	–
10-16.5 SureTrax ET0 BKT	–	–	–	–	–	–	–	–	–	1,200	1,200	–	–	1,200
10-16.5 Sure Trax ET40 BKT	–	–	–	–	–	–	–	–	–	1,120	1,120	1,120	1,120	–
12-16.5 EM ET0	–	–	–	–	–	–	–	–	–	–	–	–	–	1,250
12-16.5 Sure Trax ET0 BKT	–	–	–	–	–	–	–	–	–	–	–	–	–	1,270
12-16.5 Sure Trax ET45 BKT	–	–	–	–	–	–	–	–	–	–	–	1,180	1,180	–
Dual tyres 7.00-12 AS front	1,390	–	1,390	–	1,440	1,390	–	1,390	–	–	–	–	–	–
Dual tyres 10.0/75-15.3 AS front	–	–	–	1,650	–	–	–	–	–	1,650	1,650	1,670	1,670	–
Dual tyres 11.5/80-15.3 AS front	–	–	–	–	–	–	–	–	–	–	–	–	1,780	–
Dual tyres 27x8.50-15 EM front	–	–	–	1,650	–	–	–	–	–	–	–	–	–	–

For more details, see www.weidemann.de

Tread.

EM tread
Thanks to the almost parallel lamellas, the EM tread is particularly well suited for loose ground such as sand, soil or coarse gravel. Thanks to the high thrust transmission, this tyre has a large footprint and runs very smoothly on the road.

AS tread
The tapered lamellas provide for safe driving, especially on heavily contaminated terrain.

SureTrax tread
The SureTrax tread features a large footprint and high lift capacity. Ideally suited for fortified and other hard surfaces.

RP tread
Thanks to the large contact are, the ground is traversed gently. This makes the RP tread particularly well suited for application on lawns.

MPT tread
The MPT profile offers the perfect combination of good traction on uneven ground conditions as well as fast road crossings.

Multi-use
The multi-use tread was specially designed for year-round use and various climate conditions. In summer, it provides good traction on loose surfaces. In winter, it offers stability on snow and slippery driving surfaces.

Vibration characteristic values.

VIBRATIONS	Typical operating conditions	Mean value			Standard deviation (s)		
TYPE OF LOADING		$1{,}4*a_{w,eqx}$ [m/s²]	$1{,}4*a_{w,eqy}$ [m/s²]	$a_{w,eqz}$ [m/s²]	$1{,}4*s_x$ [m/s²]	$1{,}4*s_y$ [m/s²]	s_z [m/s²]
Compact wheel loader (operating weight < 4,500 kg)	Load & carry (load and transport work)	0.94	0.86	0.65	0.27	0.29	0.13
Wheel loader (operating weight > 4,500 kg)	Load & carry (load and transport work)	0.84	0.81	0.52	0.23	0.20	0.14
	Application in recovery (harsh application conditions)	1.27	0.79	0.81	0.47	0.31	0.47
	Delivery drive	0.76	0.91	0.29	0.33	0.35	0.17
	V-operation	0.99	0.84	0.54	0.29	0.32	0.14

Whole-body vibrations:

- Each machine is equipped with an operator's seat that meets the requirements of EN ISO 7096:2000.
- When the loader is properly used, whole body vibration varies from below 0.5 m/s² up to a short-term maximum value.
- To calculate the vibration values according to ISO/TR 25398:2006, it is recommended to use the values specified in the table. The actual application conditions are to be considered.
- Like wheel loaders, telehandlers are to be classified according to operating weight.

Hand-arm vibrations:

- The hand-arm vibrations are no more than 2.5 m/s².

WEIDEMANN

designed for work

Weidemann – a tradition of efficiency.

For decades, our mission has been to lighten the load of commercial agriculture by the mechanisation of stable and yard operations. This led to the design and development of the Hoftrac®, which has become a generic term for its own equipment category – the original comes from Weidemann. The close co-operation between the Weidemann developers and our users has repeatedly led to innovative concepts and a sophisticated product programme with high usability and mature technology.

We stand by this and continue to pursue our chosen path. Our customers benefit from high productivity, investment security and have a strong partner in Weidemann, who is always at their side.
Our machines and services perform at a high level and bring daily pleasure through their work operation. Made precisely for this. Weidemann – designed for work.

Weidemann – your strong partner.

All-round care.

Comprehensive dealer network.
Weidemann has a wide network of select dealers in Germany and Europe. Each dealer is part of a well-organised system. In addition to consulting and selling new machines, our dealers are happy to provide you with reliable customer service and supply you with spare parts. Weidemann offers regular training for dealers so that your contact partners are always up to date.

Attractive financing programme.
In Germany, Weidemann offers attractive options for financing or leasing machines thanks to various framework agreements. Weidemann distributors also offer various financing options at the international level. Get in touch with your local contact partner to find out about current conditions.

Personal training and instruction.
When you decide to purchase a Weidemann machine, you will not be left in the dark. When the machine is handed over, you and your entire team will receive detailed instructions on the operation and maintenance of the machine. If you would like to know more, simply contact your dealer. He or she is just around the corner and will be happy to help without bureaucracy.

Warranty extension.
Upon request, you can extend the warranty period of your machine up to 60 months or 5,000 operating hours.

WEIDEMANN
designed for work

The Weidemann product range.

The multifunctional Hoftracs®.
Powerful helper for every application.
Our innovation: the fully electric 1160 eHoftrac®.

The powerful wheel loader.
Optionally available either with load arm or telescopic arm.

The compact telehandler.
Aim high with optimal stability.

Attachments and tyres.
Your Weidemann machine becomes a multi-tool!
The optimal attachment and the right tyres for every task.

Weidemann GmbH
Mühlhäuser Weg 45 - 49
34519 Diemelsee-Flechtdorf
Germany
Tel. +49(0)5633 609-0
Fax +49(0)5633 609-666
info@weidemann.de
www.weidemann.de

WM.EMEA.10252.V01.EN/02/2017